v018.1

Accent

TRADESHOW & EVENT FURNISHINGS

CUSTOM FURNITURE

Accent on Service...
Accent on Excellence

www.GetAccent.com

CORDOBA... Black Leather

CM-1 Cordoba Sofa - Black Leather

CM-2 Cordoba Loveseat - Black Leather

CM-3 Cordoba Chair - Black Leather

CM-1 Sofa - Black Leather
80”L x 31”D x 33”H

CM-2 Loveseat - Black Leather
56”L x 31”D x 33”H

CM-3 Chair - Black Leather
33”L x 31”D x 33”H

CHARGED!

CONCORD... White Leather

C-4 Concord Sofa - White Leather

C-4C Concord Sofa w/ Charging Console - White Leather

C-5 Concord Loveseat
White Leather

C-5C Concord Loveseat w/ Charging Console
White Leather

C-6 Concord Chair
White Leather

C-4 Sofa - White Leather 79.5"L x 32"D x 34.5"H	C-5 Loveseat - White Leather 56"L x 32"D x 34.5"H	C-6 Chair - White Leather 33"L x 32"D x 34.5"H
C-4C Sofa - White Leather w/ Charging Console 87"L x 32"D x 34.5"H	C-5C Loveseat - White Leather w/ Charging Console 63.5"L x 32"D x 34.5"H	

Contempo...White or Black Leather

- ☐ I-1 Contempo Curve Sofa White Leather
- ■ I-4 Contempo Curve Sofa Black Leather

- ☐ I-2 Contempo Curve Bench White Leather
- ■ I-5 Contempo Curve Bench Black Leather

- ☐ I-3 Contempo Round Ottoman White Leather
- ■ I-6 Contempo Round Ottoman Black Leather

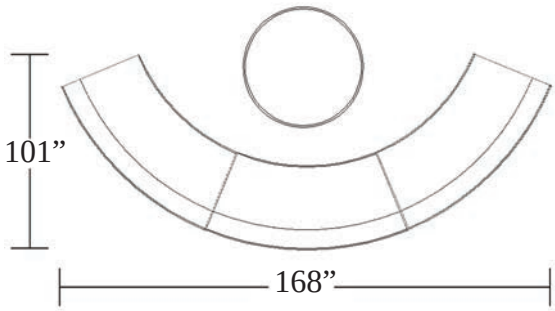

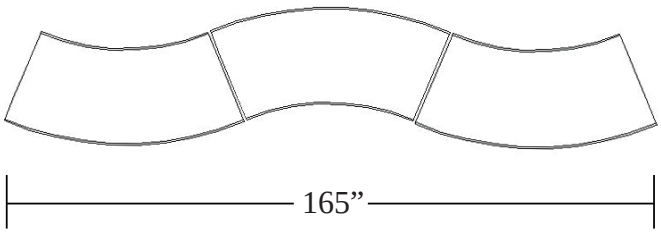

I-1 Curve Sofa - White Leather 71”L x 34”D x 30”H	I-4 Curve Sofa - Black Leather 71”L x 34”D x 30”H
I-2 Curve Bench - White Leather 71”L x 34”D x 17”H	I-5 Curve Bench - Black Leather 71”L x 34”D x 17”H
I-3 Round Ottoman - White Leather 40”L x 40”D x 17”H	I-6 Round Ottoman - Black Leather 40”L x 40”D x 17”H

Laredo... Black Leather

C-1 Laredo Sofa - Black Leather

C-2 Laredo Loveseat - Black Leather

C-3 Laredo Chair - Black Leather

South Beach... White or Red Leather

- ☐ E-1 South Beach Sofa -White Leather
- ■ E-4 South Beach Sofa - Red Leather

- ☐ E-2 South Beach Chair White Leather
- ■ E-5 South Beach Chair Red Leather

- ☐ E-3 South Beach Bench White Leather
- ■ E-6 South Beach Bench Red Leather

C-1 Sofa - Black Leather 77”L x 34”D x 32”H	E-1 Sofa - White Leather 85”L x 34”D x 32”H	E-4 Sofa - Red Leather 77”L x 34”D x 32”H
C-2 Loveseat - Black Leather 54”L x 34”D x 32”H	E-2 Chair - White Leather 53”L x 34”D x 32”H	E-5 Chair - Red Leather 53”L x 34”D x 32”H
C-3 Chair - Black Leather 32”L x 34”D x 32”H	E-3 Bench - White Leather 53”L x 27”D x 16”H	E-6 Bench - Red Leather 53”L x 27”D x 16”H

Melrose... Red Suede

G-1 Melrose Sofa - Red Suede

G-2 Melrose Chair - Red Suede

G-3 Melrose Bench - Red Suede

G-1 Sofa - Red Suede
78 ”L x 41”D x 30”H

G-2 Chair - Red Suede
40”L x 36”D x 30”H

G-3 Bench - Red Suede
61”L x 21”D x 17”H

Modern... White Leather & Chrome

H-5 Modern Sofa
White Leather
72”L x 31”D x 26”H

H-6 Modern Chair
White Leather
35”L x 32”D x 27”H

I -10 Da Vinci Sofa
White Leather
74”L x 35”D x 36”H
Flat (74”L x 48”D x 18”H)

H-5 Modern Sofa - White Leather

H-6 Modern Chair - White Leather

I-10 Da Vinci Sofa - White Leather

Sofa Folds into Flat Bench

Monte Carlo...White or Black Leather

- ■ H-1 Monte Carlo Loveseat Black Leather
- □ H-3 Monte Carlo Loveseat White Leather

- ■ H-2 Monte Carlo Corner Black Leather
- □ H-4 Monte Carlo Corner White Leather

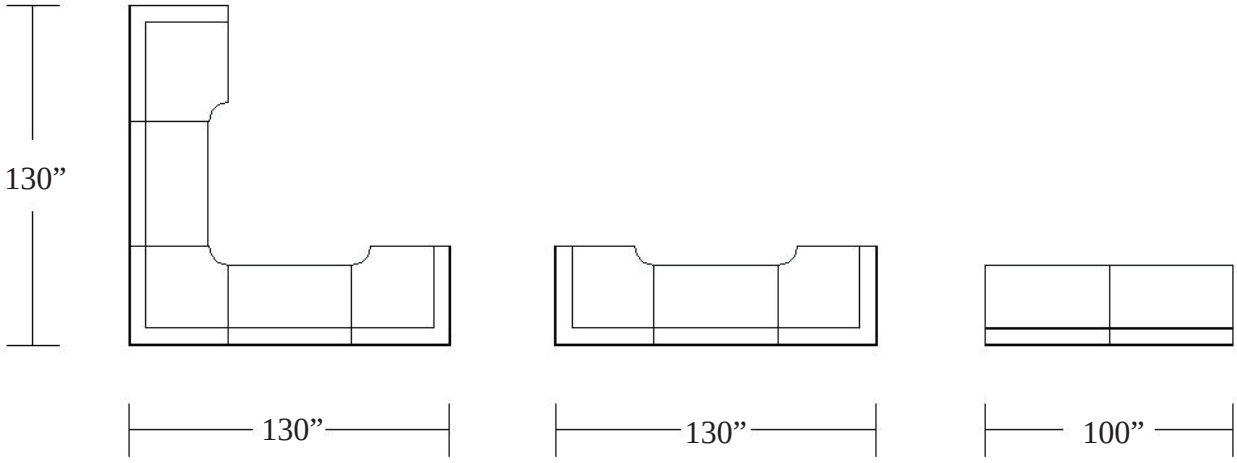

H-1 Loveseat - Black Leather
50”L x 38”D x 29”H

H-3 Loveseat - White Leather
50”L x 38"D x 29”H

H-2 Corner - Black Leather
40”L x 40”D x 29”H

H-4 Corner - White Leather
40”L x 40”D x 29”H

Uptown... Black Suede

A-1 Uptown Sofa - Black Suede

A-2 Uptown Loveseat - Black Suede

A-3 Uptown Chair- Black Suede

A-4 Uptown Bench - Black Suede

A-1 Sofa - Black Suede
83”L x 32”D x 32”H

A-2 Loveseat - Black Suede
59”L x 32”D x 32”H

A-3 Chair - Black Suede
39”L x 32”D x 32”H

A-4 Bench - Black Suede
61”L x 20”D x 17”H

Newport... Tan Suede

B-1 Newport Sofa - Tan Suede

B-2 Newport Loveseat - Tan Suede

B-3 Newport Chair - Tan Suede

B-1 Sofa - Tan Suede
79”L x 34”D x 32”H

B-2 Loveseat - Tan Suede
54”L x 34”D x 32”H

B-3 Chair - Tan Suede
32”L x 34”D x 32”H

ACCENT CHAIRS...

F-7 Stage Chair
Black Leather
27”L x 23”D x 35”H

F-8 Stage Chair
Burgundy Leather
27”L x 23”D x 35”H

F-9 Stage Chair
White Leather
27”L x 23”D x 35”H

F-7

F-8

F-9

I-9 Glove Chair - White Leather
30”L x 30”D x 32”H

E-18 Aspen Chair
White Leather
30.5”L x 28”D x 30”H

I-9

E-18

F-1

F-2

F-3

F-4

F-5

F-6

F-1 Barcelona Chair - Red Leather
31”L x 35”D x 33”H

F-3 Barcelona Chair - White Leather
31”L x 35”D x 33”H

F-5 Barcelona Chair - Black Leather
31”L x 35”D x 33”H

F-2 Barcelona Ottoman - Red Leather
24”L x 24”D x 17”H

F-4 Barcelona Ottoman - White Leather
24”L x 24”D x 17”H

F-6 Barcelona Ottoman - Black Leather
24”L x 24”D x 17”H

CHARGED!

**Electric Required for following CHARGED products*

E-14C

E-15C

M-5J

I-1C

P-13C

E-14C Tall Pub Table - White
Charged
60”L x 25”D x 42”H

E-15C Short Pub Table - White
Charged
60”L x 25”D x 30”H

ADD LIGHTING
*E-UL Under Lighting Add-on
*Available on E-8C, E-14C, and E-15C

M-5J Bar Table - White / Chrome
Charged
30”Dia x 42”H

I-1C Contempo Curve Sofa
White Leather - Charged
71”L x 34”D x 30”H

P-13C White Laminant
Conference Table - Charged
53”L x 33”D x 29”H

CHARGED!

**Electric Required for following CHARGED products*

E-11 Charged Sofa
White Leather

E-12 Charged Loveseat
White Leather

E-13 Charged Chair
White Leather

E-11 Sofa - White Leather - Charged
72”L x 31”D x 32”H

E-12 Loveseat - White Leather - Charged
55”L x 31”D x 32”H

E-13 Chair - White Leather - Charged
33”L x 31”D x 32”H

E-10C
White Cube End Table - Charged
(Multi Devise Charging Cable)

D-6C
Black Cube End Table - Charged
(Multi Devise Charging Cable)

E-8C

E-10C End Table - White Cube - Charged
20”L x 20”D x 20”H

D-6C End Table - Black Cube - Charged
24”L x 24”D x 20”H

E-8C Cocktail - White Rectangle - Charged
47”L x 23”D x 16”H

Occasional Tables...

I-7

I-8

A-10

A-11

B-4

B-5

D-4

D-5

D-6

** Also Available Charged (D-6C)*

I-7 Cocktail - Chrome / Glass 45”L x 32”D x 18”H	A-10 Cocktail - Black / Glass 48”L x 24”D x 17”H	B- 4 Cocktail - Natural 48”L x 24”D x 17”H	D-4 Cocktail - Black Square 30”L x 30”D x 16”H
I-8 End Table - Chrome / Glass 21”Dia x 21”H	A-11 End Table - Black / Glass 21”L x 21”D x 21”H	B-5 End Table - Natural 24”Dia x 21”H	D-5 Cocktail - Black Cylinder 30”Dia x 15”H
			D-6 End Table - Black Cube 24”L x 24”D x 20”H

Occasional Tables...

E-7

E-8

E-9

** Also Available Charged (E-8C)*

E-10

** Also Available Charged (E-10C)*

E-19

CM-4

CM-5

CM-6

CM-7

E-7 Cocktail - White Square 31”L x 31”D x 15”H	E-10 End Table - White Cube 20”L x 20”D x 20”H	CM-5 End Table - Wood Grain 19.5”L x 19.5”D x 21”H
E-8 Cocktail - White Rectangle 47”L x 23”D x 16”H	E-19 Side Table - White 10”L x 18”D x 25”H	CM-6 Cocktail Table - White 44”L x 22”D x 17”H
E-9 End Table - White Square 20”L x 20”D x 19”H	CM-4 Cocktail Table - Wood Grain 44”L x 22”D x 17”H	CM-7 End Table - White 19.5”L x 19.5”D x 21”H

Ottomans & Benches...

J-12 Black Cube Ottoman
17”L x 17”D x 17”H

J-13 Orange Cube Ottoman
17”L x 17”D x 17”H

J-14 White Cube Ottoman
17”L x 17”D x 17”H

J-15 Red Cube Ottoman
17”L x 17”D x 17”H

J-16 White Swivel Ottoman
18”Dia x 17.25”H

J-17 Orange Swivel Ottoman
18”Dia x 17.25”H

J-18 Balck Swivel Ottoman
18”Dia x 17.25”H

G-4 LED Cube - Glow
20”L x 20”D x 20”H

J-10 White Storage Cube
18”L x 18”D x 17”H

J-11 Black Leather Ottoman
18”L x 18”D x 18”H

J-12

J-13

J-14

J-15

J-16

J-17

J-18

G-4

ADJUSTABLE COLORS

J-10

J-11

E-6

E-3

J-19

A-4

E-6 South Beach Bench
Red Leather
53”L x 27”D x 16”H

E-3 South Beach Bench
White Leather
53”L x 27”D x 16”H

J-19 Rustic Wood Bench
59”L x 16”D x 17.5”H

A-4 Uptown Bench
Black Suede
61”L x 20”D x 17”H

Work Stations...

E-14

** Also Available Charged (E-14C)*

E-15

** Also Available Charged (E-15C)*

E-14 Tall Pub Table - White
60”L x 25”D x 42”H

E-15 Short Pub Table - White
60”L x 25”D x 30”H

O-10 Parson Desk - Black
48”L x 24”D x 29”H

J-20 Work Station - Black
57”L x 24”D x 40”H

J-21 Work Station - White
57”L x 24”D x 40”H

O-10

J-20

J-21

L-24 Anaheim Chair - White
18”L x 20”D x 36”H

J-1 Dynamic Chair - Black
23”L x 24”D x 32”H

J-2 Dynamic Chair - Green
23”L x 24”D x 32”H

J-3 Dynamic Chair - Orange
23”L x 24”D x 32”H

J-4 Dynamic Chair - White
23”L x 24”D x 32”H

L-3 Maple / Chrome Chair
16”L x 18”D x 31”H

L-9B Chair - Black / Chrome
16”L x 18”D x 31”H

L-9R Chair - Red / Chrome
16”L x 18”D x 31”H

L-9W Chair - White / Chrome
16”L x 18”D x 31”H

K-5 Euro Chair - Black
22”L x 23”D x 28”H

K-6 Jet Black Chair
16”L x 18”D x 31”H

M-16 Gunmetal Chair
18”L x 21”D x 34”H

L-21 Chrome Chair
24”L x 18”D x 29”H

M-1 Chair - Blue / Black
20”L x 20”D x 32”H

M-3 Chair - Red / Black
20”L x 20”D x 32”H

M-3B Chair - Black/ Black
20”L x 20”D x 32”H

L-24

Seating... Chairs

J-1

J-2

J-3

J-4

L-3

L-9B

L-9R

L-9W

K-5

K-6

M-16

L-21

- M-1 Blue / Black
- M-3 Red / Black
- M-3B Black / Black

L-7W

Short Tables...

L-1 Table - Maple / Chrome
30”Dia x 29”H

L-2 Table - Maple / Chrome
36”Dia x 29”H

L-7W Table - White / Chrome
30”Dia x 29”H

L-7S Table - White Square
30”L x 30”D x 29”H

L-7 Table - Black / Chrome
30”Dia x 29”H

L-8 Table - Black / Chrome
36”Dia x 29”H

K-1 Table - Black
24”Dia x 29”H

K-2 Table - Black
30”Dia x 29”H

K-3 Table - Black
36”Dia x 29”H

K-4 Table - Black
42”Dia x 29”H

L-7R Table - Rustic
30” L x 30”D x 30”H

L-20 Table - Chrome
30”Dia x 29”H

L-14 Glass Table - Black
(Rounded Corners)
42”Dia x 29”H

L-15 Glass Table - Chrome
36”Dia x 29”H

L-1 (30"Diam)
L-2 (36"Diam)

L-7W

L-7S

L-7 (30"Diam)
L-8 (36"Diam)

K-1 (24"Diam)
K-2 (30"Diam)
K-3 (36"Diam)
K-4 (42"Diam)

L-7R

L-20

L-14

L-15

L-6 Barstool - Maple / Chrome
16”L x 18”D x 42”H

L-12W Barstool - White / Chrome
16”L x 18”D x 42”H

L-12B Barstool - Black / Chrome
16”L x 18”D x 42”H

L-12R Barstool - Red / Chrome
16”L x 18”D x 42”H

L-18 Swivel Stool
White / Chrome - Adj
15”L x 15”D x 25”- 33”H

L-18B Swivel with Back
White / Chrome - Adj
23”L x 17”D x 42”H

L-19 Swivel Stool
Black / Chrome - Adj
15”L x 15”D x 25”- 33”H

K-10 Euro Stool - Black
21”L x 20”D x 41”H

K-11 Jet Black Stool
16”L x 18”D x 42”H

L-23 Stool - Chrome
20”L x 16”D x 39”H

M-6 Curve Barstool
White / Chrome - Adj
17”L x 18”D x 35”H

M-14 Crescent Stool
White / Chrome - Adj
22”L x 19”D x 40”H

M-15 Gunmetal Barstool
18”L x 18”D x 29”H

M-13 Scoop - White
17” L x 22”- 33”H - Adj

M-10 Scoop - Red
17” L x 22” - 33”H - Adj

M-11 Scoop - Grey
17” L x 22”- 33”H - Adj

M-12 Scoop - Black
17” L x 22”- 33”H - Adj

M-4 Barstool - Red / Black
20”L x 22”D x 45”H -Swivel

M-4B Barstool - Black / Black
20”L x 22”D x 45”H - Swivel

M-2 Barstool - Blue / Black
20”L x 22”D x 45”H - Swivel

L-6

L-12W

L-12B

L-12R

Seating... Barstools

L-18

L-18B

L-19

K-10

K-11

L-23

M-6

M-14

M-15

- M-13 White Scoop
- M-10 Red Scoop
- M-11 Grey Scoop
- M-12 Black Scoop

- M-4 Red / Black
- M-4B Black / Black
- M-2 Blue / Black

L-10 (30"Diam)
L-11 (36"Diam)

Tall Bar Tables...

L-4 (30"Diam)
L-5 (36"Diam)

M-5

** Also Available Charged (M-5J)*

M-5S

L-10 (30"Diam)
L-11 (36"Diam)

K-7 (24"Diam)
K-8 (30"Diam)
K-9 (36"Diam)

M-5R

L-4 Bar Table - Maple / Chrome
30”Dia x 42”H

L-5 Bar Table - Maple / Chrome
36”Dia x 42”H

M-5 Bar Table - White / Chrome
30”Dia x 42”H

M-5S Bar Table - Square
White / Chrome
30”L x 30"D x 42”H

L -10 Bar Table - Black / Chrome
30”Dia x 42”H

L -11 Bar Table - Black / Chrome
36”Dia x 42”H

K-7 Bar Table - Black
24”D ia x 42”H

K-8 Bar Table - Black
30”Dia x 42”H

K-9 Bar Table - Black
36”Dia x 42”H

M-5R Bar Table - Square
Rustic
30”L x 30"D x 42”H

L-17 Bar Table - Glass / Chrome
31.5”Dia x 42”H

L-22 Bar Table - Chrome
30”Dia x 42”H

M-7 Gelato Table -White
24”Dia x 31”- 40”H - Adj

M-8 Gelato Table - Grey
24”Dia x 31”- 40”H - Adj

M-9 Gelato Table - Black
24”Dia x 31”- 40”H -Adj

L-17

L-22

M-7

M-8

M-9

N-1 Pedestal - Black
12”L x 12”D x 30”H

N-2 Pedestal - Black
12”L x 12”D x 36”H

N-3 Pedestal - Black
12”L x 12”D x 42”H

N-4 Pedestal - Grey
12”L x 12”D x 30”H

N-5 Pedestal - Grey
12”L x 12”D x 36”H

N-6 Pedestal - Grey
12”L x 12”D x 42”H

N-7 Pedestal - Black
18”L x 18”D x 36”H

N-8 Pedestal - Black
18”L x 18”D x 42”H

N-9 Pedestal - Grey
18”L x 18”D x 36”H

N-10 Pedestal - Grey
18”L x 18”D x 42”H

N-15 Pedestal - White
18”L x 18”D x 36”H

N-16 Pedestal - White
18”L x 18”D x 42”H

N-11 Pedestal - Black
24”L x 24”D x 42”H

N-12 Pedestal - Grey
24”L x 24”D x 42”H

N-13 Locking Pedestal - Black
24”L x 24”D x 42”H

N-13C Locking Pedestal - Black
(Charged) 24”L x 24”D x 42”H

N-14 Locking Pedestal - White
24”L x 24”D x 42”H

N-14 C Locking Pedestal - White
(Charged) 24”L x 24”D x 42”H

N-13

Display Pedestals & Kiosks...

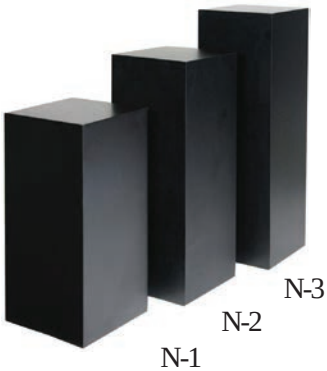

N-3
N-2
N-1

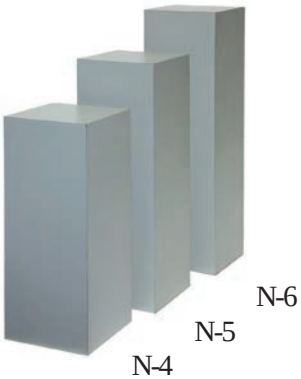

N-6
N-5
N-4

N-8
N-7

N-10
N-9

N-15

N-16

N-11

N-12

■ N-13 Black
□ N-14 White

■ N-13C Black - Charged
□ N-14C White - Charged

** Electric Required for Bar Lighting Options*

O-4

Bars & Reception Counters...

O-1 Martini Bar
50”L x 50”D x 47”H

O-2 Martini Bar with Colored Lighting.
50”L x 50”D x 47”H

O-3 Cosmopolitan Bar
72”L x 27”D x 42”H

O-4 Cosmopolitan Bar with Lighting Option
72”L x 27”D x 42”H

O-5 Reception Counter - Black
48”L x 16”D x 42”H

O-6 Contour Counter with Literature Holder - Black
45”L x 21”D x 41”H

O-7 Contour Counter with Literature Holder - Grey
45”L x 21”D x 41”H

O-1

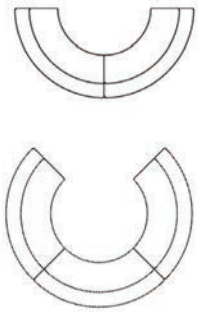

O-2

O-3

O-5

O-6

O-7

P-16 Table - White
79”L x 36”D x 30”H

P-1 Table - Maple 6ft
72”L x 36”D x 29”H

P-2 Table - Maple 8ft
96”L x 48”D x 29”H

P-3 Table - Mahogany 6ft
72”L x 36”D x 29”H

P-4 Table - Mahogany 8ft
96”L x 48”D x 29”H

P-5 Table - Mahogany 10ft
120”L x 48”D x 29”H

P-6 Table - Honey Oak 6ft
72”L x 36”D x 29”H

P-6B Table - Honey Oak 6ft
72”L x 36”D x 29”H
(Charged)

P-6C Table - Honey Oak 8ft
96”L x 36”D x 29”H
(Charged)

P-7 Table - Black Oval 6ft
72”L x 36”D x 29”H

P-8 Table - Black Oval 8ft
96”L x 48”D x 29”H

P-9 Table - Black Oval 10ft
120”L x 48”D x 29”H

P-10 Table - Grey Oval 6ft
72”L x 36”D x 29”H

P-11 Table - Grey Oval 8ft
96”L x 48”D x 29”H

P-13 Chrome Table - White
Frosted Glass Top
53”L x 33”D x 29”H

P-14 Table - Honey Oak
42”Dia x 29”H
P-14C (Charged)

P-15 Table - Mahogany
42” Dia x 29”H

P-13C Chrome Table - White
Laminant Top - Charged
53”L x 33”D x 29”H

P-16

Conference Tables...

P-1 6ft
P-2 8ft

P-3 6ft
P-4 8ft
P-5 10ft

P-6 6ft
P-6B 6ft - Charged
P-6C 8ft - Charged

P-7 6ft
P-8 8ft
P-9 10ft

P-10 6ft
P-11 8ft

P-13

P-14
P-14C - Charged

P-15

P-13C - Charged

Conference Chairs...

Q-1

Q-3

Q-4

Q-5

Q-6

Q-7

Q-8

Q-9

Q-10

Q-11

Q-12

Q-13

Q-14

Q-1 Leather Executive - Black
25”L x 28”D x 43”H

Q-3 Leather Izzo - White
25”L x 28”D x 42”H

Q-4 Leather Izzo - Black
25”L x 28”D x 42”H

Q-5 Jr. Executive - Black
24”L x 25”D x 38”H

Q-6 Jr. Executive - Grey
24”L x 25”D x 38”H

Q-7 Sled Chair - Black
24”L x 24”D x 32”H

Q-8 Sled Chair - Grey
24”L x 24”D x 32”H

Q-9 Breuer Chair - Black / Chrome
19”L x 23”D x 31”H

Q-10 Breuer Chair - Grey / Chrome
19”L x 23”D x 31”H

Q-11 Drafting Stool - Black
20”L x 23”D x 51”H
Seat Height 23”-33”H Adj

Q-12 Drafting Stool - Grey
20”L x 23”D x 51”H
Seat Height 23”-33”H Adj

Q-13 Secretarial Chair - Black
20”L x 23”D x 36”H
Seat Height 16”-21”H Adj

Q-14 Secretarial Chair - Grey
20”L x 23”D x 36”H
Seat Height 16”-21”H Adj

O-18 iPad Stand - White
41”H x 14”Dia Base

O-19 iPad Stand - Black
41”H x 14”Dia Base

O-22 Stanchion Pole - Chrome
39” H

O-23 Stanchion Rope
6.5’ Burgundy

O-24 Stanchion Rope
6.5’ Black

O-25 Park Bench - Black
50"L x 21"D x 35"H

O-11 Refrigerator
20”L x 20”D x 34”H
115 Volts / 155.25 Watts

O-12 Coat Rack
21"x 21" Base x 68”H

A-12 Floor Lamp - Silver
72"H

O-13 Free Standing Mirror
20”W x 58”H

O-14 Literature Stand
6 pocket
10”L x 9”H x 64”H

O-15 Folding Literature Stand
Silver
11”L x 15”D x 60”H

O-16 Folding Literature Stand
Black
11”L x 15”D x 60”H

O-20 Universal Tablet Stand
Adjustable from 29"H - 43.5”H

O-18

O-19

Accessories...

O-22 Stanchion Pole
O-23 Burgundy Rope
O-24 Black Rope

O-25

O-11

O-12

A-12

O-13

O-14

O-15

O-16

O-20

R-1

R-2

Shelving & Storage...

R-1 Etagere - Black
(Glass Shelves)
30”L x 14”D x 67”H

R-2 Etagere - Chrome
(Glass Shelves)
30”L x 14”D x 67”H

R-3 Bookcase - Grey
36”L x 12”D x 48”H

R-4 Bookcase - Black
36”L x 12”D x 48”H

R-5 Bookcase - Grey
36”L x 12”D x 72”H

R-6 Bookcase - Black
36”L x 12”D x 72”H

R-7 Filing Cabinet - Grey
(2 drawer)
15”L x 26.5”D x 28.5”H

R-8 Filing Cabinet - Black
(2 drawer)
15”L x 25”D x 28.5”H

R-9 Filing Cabinet - Black
(4 drawer)
15”L x 25”D x 52”H

R-10 Storage Cabinet - Grey
36”L x 18”D x 42”H

R-11 Storage Cabinet - Black
36”L x 18”D x 42”H

R-12 Storage Cabinet - Black
36”L x 18”D x 72”H

R-3

R-4

R-5

R-6

R-7

R-8

R-9

R-10

R-11

R-12

S-1 Desk - Natural / Black
60”L x 30”D x 29”H

S-2 Credenza - Natural / Black
60”L x 20”D x 29”H

S-3 Desk - Honey Oak
60”L x 30”D x 29”H

S-4 Credenza - Honey Oak
60”L x 20”D x 29”H

S-5 Desk - Mahogany
60”L x 30”D x 29”H

S-6 Credenza - Mahogany
60”L x 20”D x 29”H

S-5

Office... Desks

S-1

S-2

S-3

S-4

S-5

S-6

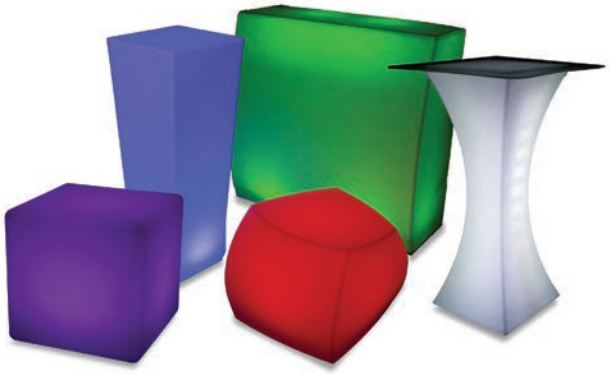

LED Glow...Multi-Colored Lighting

G-4 LED Cube - Glow
20”L x 20”D x 20”H

G-5 Twisted Cube - Glow
22”L x 22”D x 17”H

G-6 LED Fluted Bar Table Glow
26”L x 26”D x 43”H

G-7 LED Pedestal - Glow
15.5”L x 15.5“D x 40”H

G-9 LED Curve Bar - Glow
64”L x 23”D x 42”H

G-10 Straight Bar - Glow
48”L x 19”D x 42”H

LED Items come Fully Charged
with remote control
to adjust color options

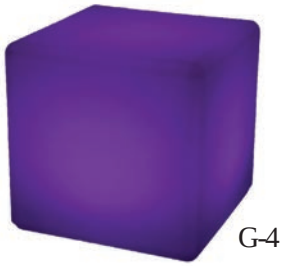

G-4

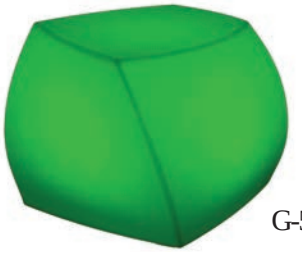

G-5

G-6

G-7

G-9

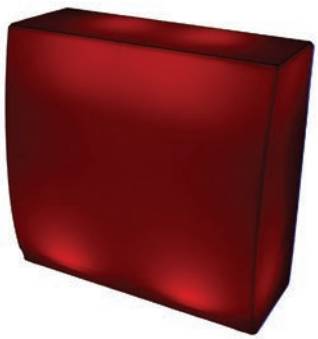

G-10

ACCENT Tradeshow & Event Furnishings

3438 Maggie Blvd. * Orlando FL 32811 * Phone 407.648.7474 * Email: info@GetAccent.com

v018.0 425

A-1	Black Suede Sofa	$425
A-2	Black Suede Loveseat	$385
A-3	Black Suede Chair	$270
A-4	Black Suede Bench	$241
A-10	Black/Glass Cktl. Table	$178
A-11	Black/Glass End Table	$161
A-12	Silver Floor Lamp	$86
B-1	Tan Suede Sofa	$425
B-2	Tan Suede Loveseat	$385
B-3	Tan Suede Chair	$270
B-4	Natural Ckt Table	$178
B-5	Natural End Table	$161
C-1	Black Leather Sofa	$425
C-2	Black Leather Loveseat	$385
C-3	Black Leather Chair	$270
C-4	White Leather Sofa	$498
C-4C	White Sofa w/Charging Console	$548
C-5	White Leather Loveseat	$448
C-5C	White Loveseat w/Charging Consc	$498
C-6	White Leather Chair	$270
CM-1	Black Leather Sofa	$425
CM-2	Black Leather Loveseat	$385
CM-3	Black Leather Chair	$270
CM-4	Wood Grain Rec.Ckt.Tbl.	$178
CM-5	Wood Grain Square End Tbl.	$161
CM-6	White Rec. Ckt.Table	$178
CM-7	White Square End Table	$161
D-4	Black Cube Ckt Table	$184
D-5	Black Round Ckt Table	$184
D-6	Black Cube End Table	$167
D-6C	Black Cube End- Charged	$197
E-1	White South Beach Sofa	$512
E-2	White South Beach Chair	$328
E-3	White SouthBeach Bench	$241
E-4	Red South Beach Sofa	$512
E-5	Red South Beach Chair	$328
E-6	Red SouthBeach Bench	$241
E-7	White Square Ckt Table	$172
E-8	White Rec. Ckt. Table	$172
E-8C	White Rec. Ckt.- Charged	$247
E-9	White Square End Table	$161
E-10	White Cube End	$225
E-10C	White Cube End- Charged	$255
E-11	White Sofa w/ Outlet -Charged	$595
E-12	Wht. Loveseat w/Outlet-Charged	$495
E-13	White Chair w/Outlet - Charged	$395
E-14	Tall White Pub Table	$375
E-14C	Tall White Pub- Charged	$450
E-U4L	Under-Lighting Add-on	$50
E-15	Short White Pub Table	$350
E-15C	Short White Pub-Charged	$425
E-18	Aspen Wht. Leather Chair	$328
E-19	White & Chrome Side Table	$85
F-1	Barcelona Chair Red	$362
F-2	Barcelona Ottoman Red	$184
F-3	Barcelona Chair White	$362
F-4	Barcelona Ottoman White	$184
F-5	Barcelona Chair Black	$362
F-6	Barcelona Ottoman Black	$184
F-7	Black Stage Chair	$185
F-8	Burgundy Stage Chair	$185
F-9	White Stage Chair	$185
G-1	Red Melrose Sofa	$512
G-2	Red Melrose Chair	$328
G-3	Red Melrose Bench	$241
G-4	LED Glow Cube	$185
G-5	LED Glow Twist Cube	$195
G-6	LED Fluted Bar Table	$245
G-7	LED Glow Pedestal	$235
G-9	LED Glow Curve Bar	$975
G-10	LED Glow Straight Bar	$875
H-1	Black Sectional Loveseat	$448
H-2	Black Sectional Corner	$328
H-3	White Sectional Loveseat	$448
H-4	White Sectional Corner	$328
H-5	Wht/Chrm Modern Sofa	$475
H-6	Wht/Chrm Modern Chair	$275
I-1	White Curve Sofa	$489
I-1C	White Curve Sofa - Charged	$489
I-2	White Curve Bench	$316
I-3	White Round Ottoman	$241
I-4	Black Curve Sofa	$489
I-5	Black Curve Bench	$316
I-6	Black Round Ottoman	$241
I-7	Chrome/Glass Cktl. Table	$201
I-8	Chrome/Glass End Table	$178
I-9	Wht/Chrome Glove Chair	$282
I-10	White Da Vinci Sofa	$475
J-1	Black Dynamic Chair	$144
J-2	Green Dynamic Chair	$144
J-3	Orange Dynamic Chair	$144
J-4	White Dynamic Chair	$144
J-10	White Storage Cube	$109
J-11	Black Leather Ottoman	$109
J-12	Black Cube	$109
J-13	Orange Cube	$109
J-14	White Cube	$109
J-15	Red Cube	$109
J-16	White Swivel Ottoman	$109
J-17	Orange Swivel Ottoman	$109
J-18	Black Swivel Ottoman	$109
J-19	Rustic Bench	$241
J-20	Black Work Station	$375
J-21	White Work Station	$375
K-1	24" Black Table	$132
K-2	30" Black Table	$132
K-3	36" Black Table	$150
K-4	42" Black Table	$178
K-5	Black Euro Chair	$120
K-6	Jet Black Chair	$120
K-7	24" Black Tall Bar Table	$172
K-8	30" Black Tall Bar Table	$172
K-9	36" Black Tall Bar Table	$184
K-10	Black Barstool	$150
K-11	Jet Black Barstool	$172
L-1	30" Maple Table	$150
L-2	36" Maple Table	$161
L-3	Maple/Chrome Chair	$144
L-4	30" Maple Tall Bar Table	$178
L-5	36" Maple Tall Bar Table	$184
L-6	Maple/Chrome Barstool	$172
L-7	30" Black/Chrome Table	$138
L-7S	White Square Table	$138
L-7R	Rustic Table	$138
L-7W	30"White/Chrome Table	$138
L-8	36" Black/Chrome Table	$155
L-9B	Black/Chrome Chair	$144
L-9R	Red/Chrome Chair	$144
L-9W	White/Chrome Chair	$144
L-10	30" Blk/Chrome Tall Tbl	$178
L-11	36" Blk/Chrome Tall Tbl	$184
L-12B	Black/Chrome Barstool	$172
L-12R	Red/Chrome Barstool	$172
L-12W	White/Chrome Barstool	$172
L-14	Black/Glass Table	$155
L-15	Chrome/Glass Table	$150
L-17	Chrm/Glass Tall Bar Tbl	$195
L-18	Wht/Chrm Swivel Stool	$150
L-18B	Wht Swivel Stool w/ Back	$184
L-19	Blk/Chrome Swivel Stool	$150
L-20	30" Chrome Table	$155
L-21	Chrome Chair	$144
L-22	30" Chrome Tall Bar Tbl	$184
L-23	Chrome Barstool	$172
L-24	White Anaheim Chair	$144
M-1	Blue/Black Chair	$144
M-2	Blue/Black Barstool	$172
M-3	Red/Black Chair	$144
M-4	Red/Black Barstool	$172
M-4B	Black/Black Barstool	$172
M-5	30" Wht/Chrome Tall Tbl.	$175
M-5J	30" Wht/Chrm Tall - Charge	$209
M-5R	Rustic Square Tall Table	$175
M-5S	White Square Tall Table	$175
M-6	White Curve Barstool	$184
M-7	White Gelato Table	$225
M-8	Grey Gelato Table	$225
M-9	Black Gelato Table	$225
M-10	Red Scoop	$172
M-11	Grey Scoop	$172
M-12	Black Scoop	$172
M-13	White Scoop	$172
M-14	White Crescent Stool	$184
M-15	Gunmetal Barstool	$172
M-16	Gunmetal Chair	$144
N-1	12X12X30 Black Ped	$172
N-2	12x12x36 Black Ped	$184
N-3	12x12x42 Black Ped	$195
N-4	12x12x30 Grey Ped	$172
N-5	12x12x36 Grey Ped	$184
N-6	12x12x42 Grey Ped	$195
N-7	18x18x36 Black Ped	$207
N-8	18x18x42 Black Ped	$218
N-9	18x18x36 Grey Ped	$207
N-10	18x18x42 Grey Ped	$218
N-11	24x24x42 Black Ped	$230
N-12	24x24x42 Grey Ped	$230
N-13	24x24x42 Black w/Door	$316
N-13C	24x24x42 Blk. w/Door-Charged	$316
N-14	24x24x42 White w/Door	$316
N-14C	24x24x42 Wht.w/Door-Charged	$316
N-15	18x18x36 White Ped	$207
N-16	18x18x42 White Ped	$218
O-1	Martini Bar	$875
O-2	Martini Bar w/ Lighting	$975
O-3	Cosmopolitan Bar	$857
O-4	Cosmo Bar w/ Lighting	$975
O-5	Reception Counter	$236
O-6	Black Rec. Counter	$385
O-7	Grey Rec. Counter	$385
O-10	Parson Desk	$225
O-11	Refrigerator (3.6 CuFt)(155 Volt)	$201
O-12	Coat Rack	$115
O-13	Free Standing Mirror	$150
O-14	Literature Stand - 6 Pocket	$126
O-15	Silver Folding Lit. Stand	$167
O-16	Black Folding Lit. Stand	$167
O-18	White iPad Stand	$126
O-19	Black iPad Stand	$126
O-20	Universal Tablet Stand	$126
O-22	Chrome Stanchion	$50
O-23	Burgundy Rope	$30
O-24	Black Rope	$30
O-25	Black Park Bench	$168
P-1	6' Maple Conf. Table	$351
P-2	8' Maple Conf. Table	$445
P-3	6' Mahogany Conf. Table	$351
P-4	8' Mahogany Conf. Table	$445
P-5	10' Mahogany Conf. Tbl.	$569
P-6	6' Honey Oak Conf. Table	$351
P-6B	6' Honey Oak- Charged	$391
P-6C	8' Honey Oak- Charged	$475
P-7	6' Black Conf. Table	$333
P-8	8' Black Conf. Table	$445
P-9	10' Black Conf. Table	$569
P-10	6' Grey Conf. Table	$333
P-11	8' Grey Conf. Table	$445
P-13	White Frosted Glass Table	$350
P-13C	White Top Table - Charged	$450
P-14	42" Dia. Honey Oak Table	$241
P-14C	42" Honey Oak - Charged	$281
P-15	42" Dia. Mahogany Table	$241
P-16	6.5' White Conf. Table	$545
P-18	8' Oak Rustic Table	$545
Q-1	Leather Executive Chair	$225
Q-3	Wht/Leather Exec Chair	$276
Q-4	Blk/Leather Exec Chair	$276
Q-5	Blk. Jr. Executive Chair	$190
Q-6	Grey Jr. Executive Chair	$190
Q-7	Black Sled Chair	$161
Q-8	Grey Sled Chair	$161
Q-9	Blk/Chrome Breuer Chair	$144
Q-10	Grey/Chrome Breuer Chair	$144
Q-11	Black Drafting Stool	$172
Q-12	Grey Drafting Stool	$172
Q-13	Black Secretarial Chair	$144
Q-14	Grey Secretarial Chair	$144
R-1	Black Etagere	$184
R-2	Chrome Etagere	$184
R-3	42" Grey Bookcase	$150
R-4	42" Black Bookcase	$150
R-5	72" Grey Bookcase	$172
R-6	72" Black Bookcase	$172
R-7	2-Dr Grey File Cabinet	$150
R-8	2-Dr Black File Cabinet	$150
R-9	4-Dr Black File Cabinet	$165
R-10	42" Grey Storage Cabinet	$165
R-11	42" Black Storage Cabinet	$165
R-12	72" Black Storage Cabinet	$195
S-1	Natural/Black Desk	$405
S-2	Natural/Black Credenza	$360
S-3	Honey Executive Desk	$405
S-4	Honey Credenza	$360
S-5	Mahogany Desk	$405
S-6	Mahogany Credenza	$360

Please Submit Order to:
Fax:407.648.2542
Info@GetAccent.com

ACCENT Tradeshow & Event Furnishings

3438 Maggie Blvd. Orlando, FL 32811 Ph: 407-648-7474 :: info@GetAccent.com

Company Information	Delivery Information
Company Name: _____	Event: _____
_____	Location: _____
Address: _____	**Booth #:** _____
_____	Open Date: _____
Phone: _____ Fax: _____	Close Date: _____
E-Mail: _____	Event Contact:

ACCENT will send an email or fax confirmation of your order, once we receive and reserve the product for your show.

Item #	Description	Qty	Price	Total
			$	$
			$	$
			$	$
			$	$
			$	$
			$	$
			$	$
			$	$
			$	$
			$	$
			$	$
			$	$
			$	$

Credit Card Information

Credit Card #:_____

Exp. Date:_____ Security Code #_____

◯ VISA ◯ AMEX ◯ Mastercard

Cardholders Name: _____
(Please Print)

Cardholders Signature:*_____

*You acknowledge that by entering a typed signature, this shall deem your credit card authorization binding upon Parties.

TOTAL ORDER $ _____

MISCELLANEOUS $ _____

SUBTOTAL $ _____

TAX $ _____

TOTAL DUE $ _____

- Orders received within 14 days of event are subject to a 20% Late Fee.
- 25% cancellation will be applied if canceled 7 days prior to event opening
- Check or Credit Card must accompany order.
- 100% cancellation will be applied if canceled on day of deliver.
- All showsite orders are subject to a 25% service charge.
- Additional drayage fees may apply from the Contractor. Refer to your Exhibit Manual.

Please email your completed order to info@GetAccent.com
or fax to 407.648.2542